DSSNR/L

SN□□

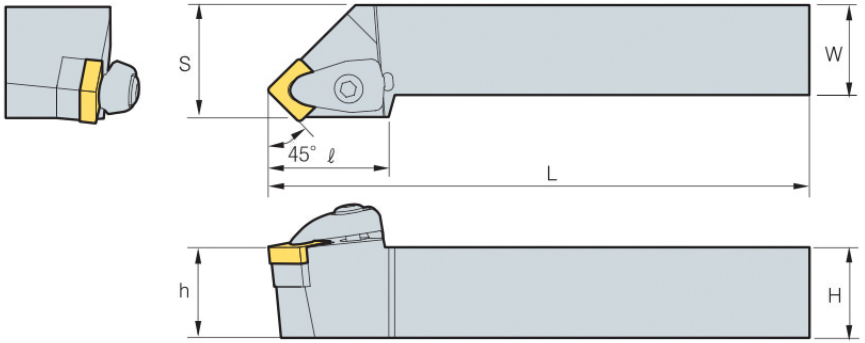

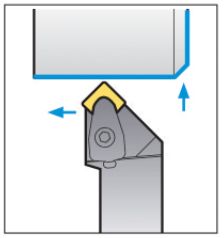

45°

• R type insert

(mm)

Designation		Stock R	Stock L	H	W	L	S	h	ℓ	Insert	Clamp	ClampScrew	Shim	Shim Screw	Spring	Wrench
DSSNR/L	**2020-K09**			20	20	125	25	20	28.5	SN□□0903□□	CVH3	CHX0415	SS32V	FTKA0307	SPR0510	HW25P
	2020-K12	●	●	20	20	125	25	20	35	SN□□1204□□	CVH4	CHX0518	SS44V	FTKA0410	SPR0714	HW30P
	2525-M12	●	●	25	25	150	32	25	35							
	3225-P12	●		32	25	170	32	32	35							
	3232-P12	●		32	32	170	40	32	35							
	2525-M15			25	25	150	32	25	38.5	SN□□1506□□	CVH5	CHX0622	SS54V	FTNA0511	SPR0811	HW40L
	3232-P15			32	32	170	40	32	38.5							
	3232-P19	●		32	32	170	40	32	46	SN□□1906□□	CVH6	CHX0622	SS64V	FTNA0511	SPR0811	HW40L
	4040-S19			40	40	250	50	40	46							