DTGNR/L

TN□□

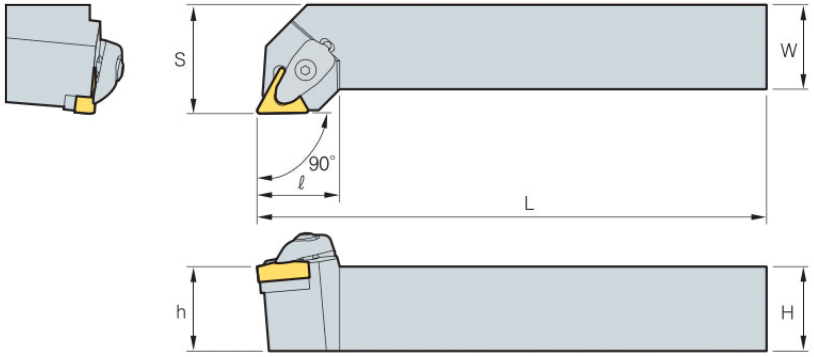

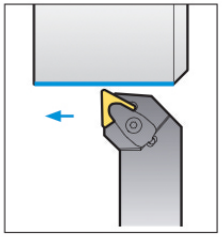

90°

• R type insert

(mm)

Designation		Stock R	Stock L	H	W	L	S	h	ℓ	Insert	Clamp	ClampScrew	Shim	Shim Screw	Spring	Wrench
DTGNR/L	**2020-K16**			20	20	125	25	20	24.5	TN□□1604□□	CVH3	CHX0415	ST32V	FTKA0307	SPR0510	HW25P
	2525-M16			25	25	150	32	25	24.5							
	3232-P16			32	32	170	40	32	24.5							
	2525-M22			25	25	150	32	25	32.6	TN□□2204□□	CVH4	CHX0518	ST44V	FTKA0410	SPR0714	HW30P
	3225-P22			32	25	170	32	32	32.6							
	3232-P22			32	32	170	40	32	32.6							